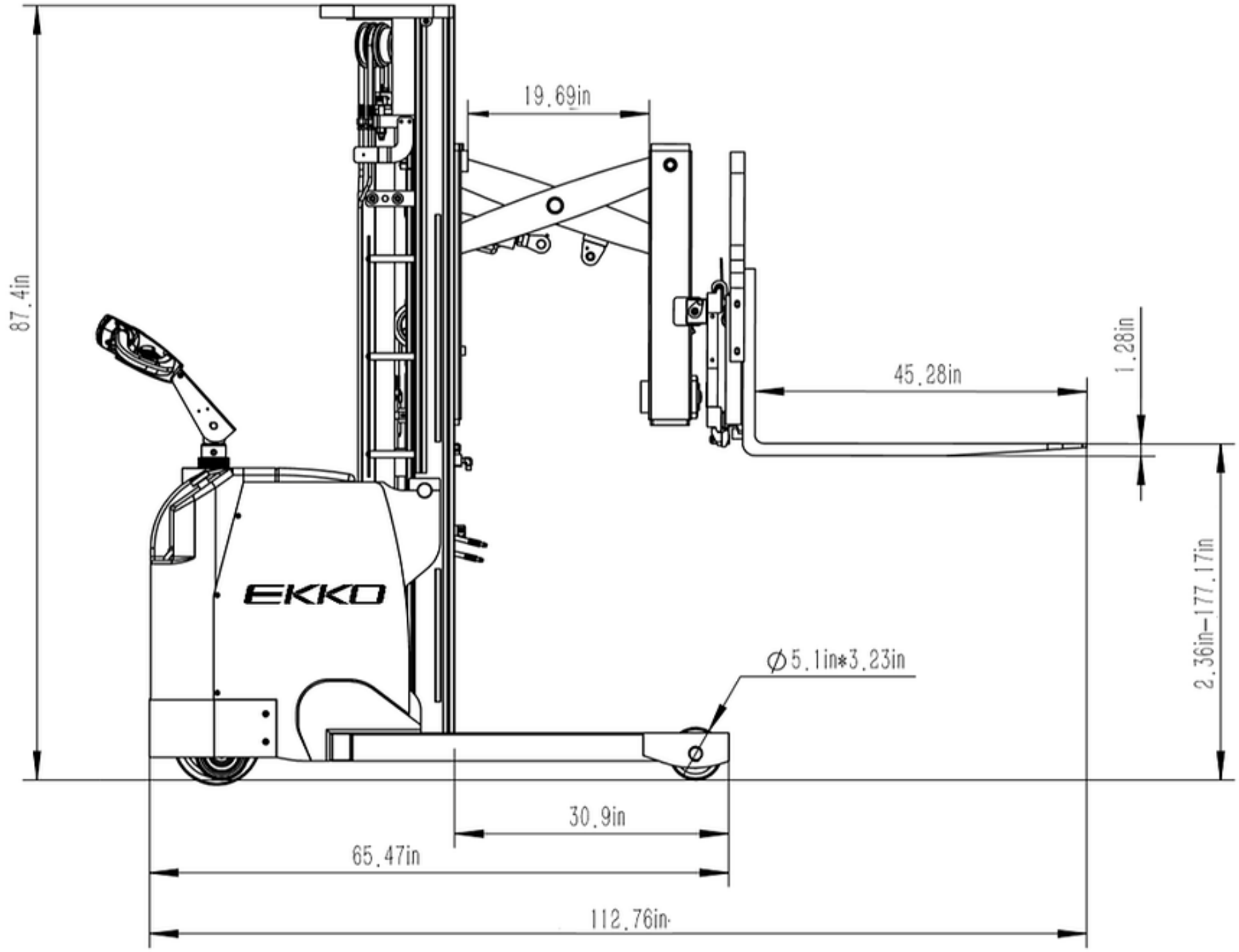
87.4in
19.69in
45.28in
1.28in
2.36in–177.17in
EKKO
∅5.1in*3.23in
30.9in
65.47in
112.76in